GARRETT COUNTY PUBLIC SCHOOLS
SOUTHERN GARRETT HIGH SCHOOL - PRESSBOX
OAKLAND, MARYLAND

SHEET TITLE	SHEET NUMBER
SIDE VIEW	1
SECTION VIEW	2
FRONT ELEVATION VIEW	3
REAR ELEVATION VIEW	4
PLAN VIEW	5
PRESSBOX SHEET	6
DETAIL SHEET	7

#10121 - OAKLAND, MARYLAND

GENERAL NOTES & SITE CONDITIONS

1. ALL DIMENSION PERTAINING TO GRANDSTAND AND SITE CONDITIONS/OBJECTS TO BE FIELD VERIFIED OR LOCATED PRIOR TO FABRICATION.

2. AS SPECIFIED AND ILLUSTRATED, ALL ALUMINUM FOOTBOARDS AND WALKING SURFACES ARE MILL FINISH. MILL FINISH ALUMINUM, WHEN EXPOSED TO THE ATMOSPHERE, FORMS A TRANSPARENT, PROTECTIVE OXIDE COATING. MILL FINISH ALUMINUM WILL STAIN WHEN MOISTURE IS TRAPPED AGAINST IT. THIS MOISTURE ENTRAPMENT CAN OCCUR AT SEVERAL STAGES OF MATERIAL DELIVERY, INCLUDING PACKAGING, SHIPPING AND STORAGE. THESE STAINS CAN BE ERRATIC AND VARY IN COLOR FROM LIGHT BRONZE TO BLACK TO CHALKY WHITE. MOISTURE STAINS HAVE NO EFFECT ON THE STRENGTH OF THE MATERIAL. THESE STAINS BECOME LESS NOTICEABLE DURING NORMAL USAGE AND EXPOSURE TO THE SUN'S RADIATION.

DESIGN LOADING

TREAD & SEAT AREA 100psf UNIFORM LIVE LOAD.
SEAT (VERTICAL) 120 lbs/lf.
SEAT (HORIZONTAL SWAY) 24lbs/lf PARALLEL AND 10lbs/lf PERPENDICULAR TO SEAT.
HANDRAIL & GUARDRAIL 50 lbs/lf IN ANY DIRECTION.
HANDRAIL & GUARDRAIL 200 lbs CONCENTRATED IN ANY DIRECTION.
SNOW LOADS AS PER STATE ADOPTED CODE
WIND LOADS AS PER STATE ADOPTED CODE
SEISMIC LOADS AS PER STATE ADOPTED CODE

Southern® BLEACHER COMPANY
GRANDSTANDS ▪ BLEACHERS ▪ STADIUMS
Established 1946

PO Box One, Graham, Texas 76450
801 Fifth Street.
Phone: 940/549-0733 Fax: 940/549-1365

NOTES

1. STRUCTURAL SHAPES MEET ONE OF THE FOLLOWING ASTM SPECIFICATIONS: A36, A36/A572 GRADE 50, A572 GRADE 50, A529–50, OR A500 GRADE B.
2. WELDS ARE ALL AROUND WITH TYPE ER70S–6 WIRE MIG.
3. ALL STEEL TO BE HOT DIPPED GALVANIZED TO A.S.T.M. A–123–89 ae1.
4. STRUCTURAL BOLTS ARE HOT DIPPED GALV. AND ARE EQUAL TO OR GREATER THAN A–307.
5. NO CONNECTIONS UTILIZING HIGH STRENGTH BOLTS ARE CLASSED AS SLIP CRITICAL.
6. ANODIZED ALUMINUM RAIL IS 1 1/4" NOMINAL PIPE SIZE. (1 5/8" O.D.)
7. SOUTHERN BLEACHER COMPANY AS A MANUFACTURER AND INSTALLER OF GRANDSTAND SEATING IS NOT AUTHORIZED TO CERTIFY PLANS AS ADA COMPLIANT. HOWEVER, TO THE BEST OF OUR KNOWLEDGE THESE PLANS MEET OR EXCEED ADA REQUIREMENTS FOR QUANTITY OF ADA SEATING, ACCESS/EGRESS TO ADA SEATING, & DISPERSAL OF ADA SEATING.

OWNER/REPRESENITIVE/ARCHITECTUAL REVIEW

PLEASE REVIEW THE DRAWINGS FOR COMPLIANCE WITH YOUR ORDER. PLEASE INDICATE ANY CHANGES OR COMMENTS ON THE DRAWINGS.

☐ APPROVED _____ SIGNATURE

☐ APPROVED AS NOTED _____ TITLE

☐ REVISE AND RE-SUBMITT _____ DATE

DATE: 5/10/10
JOB #10121
GARRETT COUNTY PUBLIC SCHOOLS
SOUTHERN GARRETT HIGH SCHOOL - PRESSBOX
OAKLAND, MARYLAND

ITEM DESCRIPTION

1. W 14 X 22 (50 ksi)
2. W 10 X 12 (50 ksi)
3. W 6 X 20 (50 ksi)
4. W 6 X 9 (50 ksi)
5. L 3 X 3 X 1/4 (50 ksi)
6. 12 X 12 X 5/8 PLATE
7. 6 X 8 X 3/8 PLATE
8. 3/4 X REQ'D LENGTH SWAY ROD (50 ksi)
9. 3/4 X 18 ANCHOR BOLT W/2 HEX HEAD NUTS & FLAT WASHER
10. 9 GAUGE CHAINLINK FENCE
11. ANODIZED ALUMINUM RAIL (SEE NOTES)

DESIGN LOADING

CODE OF REFERENCE – IBC 2006
OCCUPANCY GROUP – A5
CONSTRUCTION TYPE – VB
TREAD & SEAT AREA 100psf UNIFORM LIVE LOAD.
SEAT (VERTICAL) 120 lbs/lf.
SEAT (HORIZONTAL SWAY) 24lbs/lf PARALLEL AND 10lbs/lf PERPENDICULAR TO SEAT.
HANDRAIL & GUARDRAIL 50 lbs/lf IN ANY DIRECTION.

SNOW LOADS AS PER STATE ADOPTED CODE
WIND LOADS AS PER STATE ADOPTED CODE
SEISMIC LOADS AS PER STATE ADOPTED CODE

OF 300 POUNDS ON AN AREA OF 4 SQUARE INCHES

NOTES

1. STRUCTURAL SHAPES MEET ONE OF THE FOLLOWING ASTM SPECIFICATIONS: A36, A36/A572 GRADE 50, A572 GRADE 50, A529–50, OR A500 GRADE B.
2. WELDS ARE ALL AROUND WITH TYPE ER70S–6 WIRE MIG.
3. ALL STEEL TO BE HOT DIPPED GALVANIZED TO A.S.T.M. A–123–89 ae1.
4. STRUCTURAL BOLTS ARE HOT DIPPED GALV. AND ARE EQUAL TO OR GREATER THAN A–307.
5. NO CONNECTIONS UTILIZING HIGH STRENGTH BOLTS ARE CLASSED AS SLIP CRITICAL.
6. ANODIZED ALUMINUM RAIL IS 1 1/4" NOMINAL PIPE SIZE. (1 5/8" O.D.)
7. SOUTHERN BLEACHER COMPANY AS A MANUFACTURER AND INSTALLER OF GRANDSTAND SEATING IS NOT AUTHORIZED TO CERTIFY PLANS AS ADA COMPLIANT. HOWEVER, TO THE BEST OF OUR KNOWLEDGE THESE PLANS MEET OR EXCEED ADA REQUIREMENTS FOR QUANTITY OF ADA SEATING, ACCESS/EGRESS TO ADA SEATING, & DISPERSAL OF ADA SEATING.
8. AS SPECIFIED AND ILLUSTRATED, ALL ALUMINUM FOOTBOARDS AND WALKING SURFACES ARE MILL FINISH. MILL FINISH ALUMINUM, WHEN EXPOSED TO THE ATMOSPHERE, FORMS A TRANSPARENT, PROTECTIVE OXIDE COATING. MILL FINISH ALUMINUM WILL STAIN WHEN MOISTURE IS TRAPPED AGAINST IT. THIS MOISTURE ENTRAPMENT CAN OCCUR AT SEVERAL STAGES OF MATERIAL DELIVERY, INCLUDING PACKAGING, SHIPPING AND STORAGE. THESE STAINS CAN BE ERRATIC AND VARY IN COLOR FROM LIGHT BRONZE TO BLACK TO CHALKY WHITE. MOISTURE STAINS HAVE NO EFFECT ON THE STRENGTH OF THE MATERIAL. THESE STAINS BECOME LESS NOTICEABLE DURING NORMAL USAGE AND EXPOSURE TO THE SUN'S RADIATION.

THE ELEVATION OF 100'-0" IS USED AS A BASE ELEVATION. THIS IS FOR REFERENCE ONLY AND NOT TO BE USED AS THE ACTUAL ELEVATION.

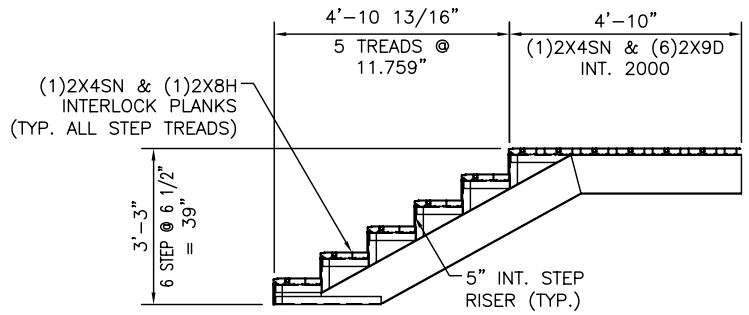

1/1 PRESSBOX STAIR DETAIL
NOT TO SCALE

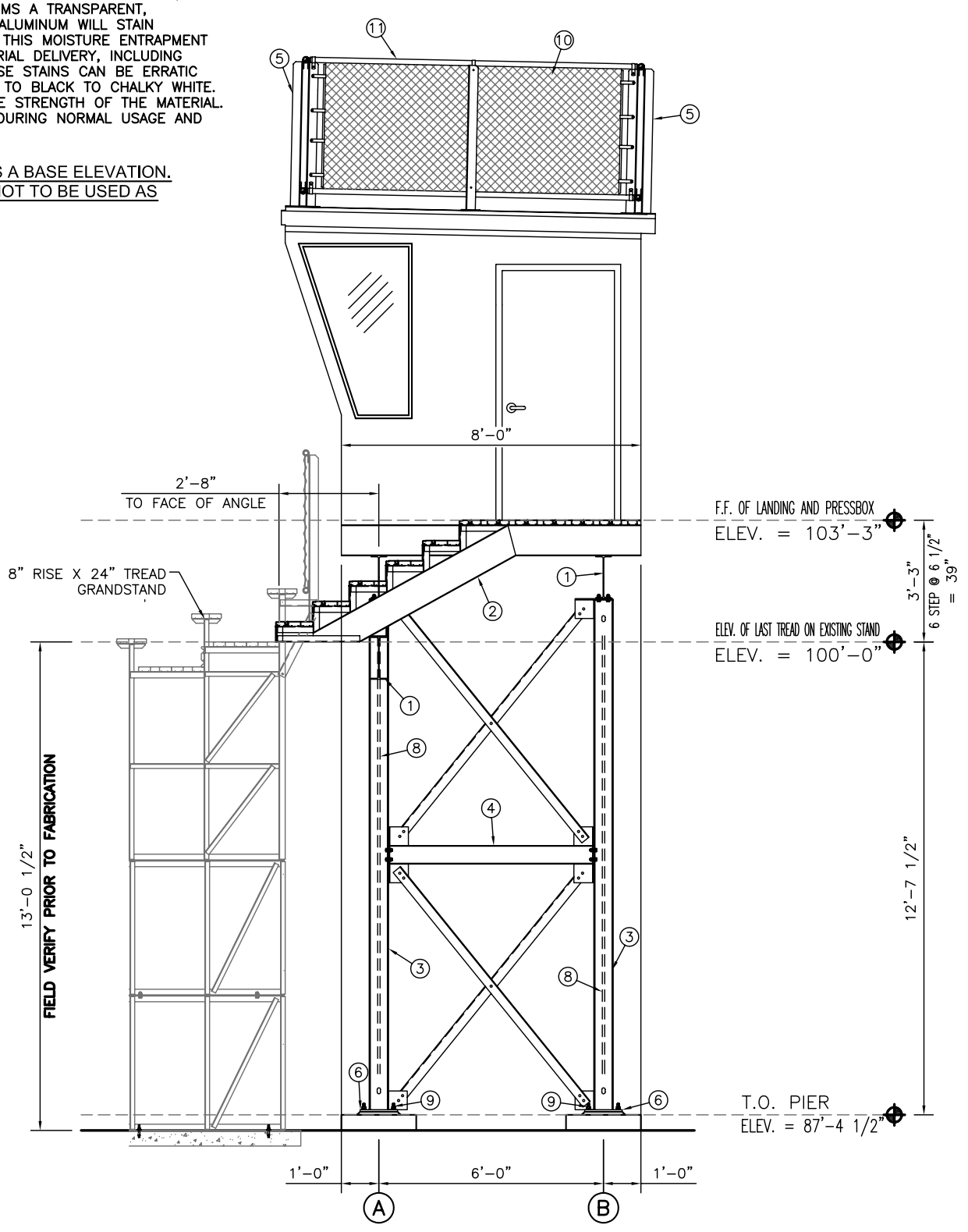

2/5/1 SIDE VIEW
SCALE:1/2"=1'–0"

DETAIL NUMBER 1 / 3 | SHEET 10 SHOWN ON SHEET CUT FROM

THIS DRAWING AND ALL INFORMATION THEREIN IS THE PROPERTY OF SAILER GROUP AND SOUTHERN BLEACHER COMPANY. IT MAY NOT BE COPIED OR REPRODUCED WITHOUT PRIOR WRITTEN CONSENT OF SAILER GROUP AND SOUTHERN BLEACHER COMPANY. THE DRAWING IS LOANED AND SUBJECT TO RETURN UPON DEMAND. DRAWING IS PROTECTED UNDER U.S. AND INTERNATIONAL COPYRIGHT LAW.

ADLER GROUP
STRUCTURAL ENGINEERS
LICENSED IN 45 STATES
3010 LBJ FREEWAY, SUITE 1060 • DALLAS, TEXAS 75234
Ph: (817) 332-1074
Fax: (817) 336-0748
Toll: (800) 900-7373
Email: readler@swbell.net

PO Box One, Graham, Texas 76450
801 Fifth Street.
Phone: 940/549-1365 Fax: 940/549-0733
Southern BLEACHER COMPANY
GRANDSTANDS • BLEACHERS • STADIUMS
Established 1946

TYPE: SIDE VIEW

TITLE: GARRETT COUNTY PUBLIC SCHOOLS
SOUTHERN GARRETT HIGH SCHOOL - PRESSBOX
OAKLAND, MARYLAND

REV BY	DATE	DESCRIPTION

DATE 5/10/10 | DRAWN DDW | CHECKED

JOB NUMBER 10121

SHEET 1 OF 7

22" X 34" (11x17 = 1/2 indicated scale)

ITEM DESCRIPTION

1. W 14 X 22 (50 ksi)
2. W 10 X 12 (50 ksi)
3. W 6 X 20 (50 ksi)
4. W 6 X 9 (50 ksi)
5. L 3 X 3 X 1/4 (50 ksi)
6. 12 X 12 X 5/8 PLATE
7. 6 X 8 X 3/8 PLATE
8. 3/4 X REQ'D LENGTH SWAY ROD (50 ksi)
9. 3/4 X 18 ANCHOR BOLT W/2 HEX HEAD NUTS & FLAT WASHER
10. 9 GAUGE CHAINLINK FENCE
11. ANODIZED ALUMINUM RAIL (SEE NOTES)

DESIGN LOADING

CODE OF REFERENCE – IBC 2006
OCCUPANCY GROUP – A5
CONSTRUCTION TYPE – VB
TREAD & SEAT AREA 100psf UNIFORM LIVE LOAD.
SEAT (VERTICAL) 120 lbs/lf.
SEAT (HORIZONTAL SWAY) 24lbs/lf PARALLEL AND
10lbs/lf PERPENDICULAR TO SEAT.
HANDRAIL & GUARDRAIL 50 lbs/lf IN ANY DIRECTION.

SNOW LOADS AS PER STATE ADOPTED CODE
WIND LOADS AS PER STATE ADOPTED CODE
SEISMIC LOADS AS PER STATE ADOPTED CODE

OF 300 POUNDS ON AN AREA OF 4 SQUARE INCHES

NOTES

1. STRUCTURAL SHAPES MEET ONE OF THE FOLLOWING ASTM SPECIFICATIONS: A36, A36/A572 GRADE 50, A572 GRADE 50, A529–50, OR A500 GRADE B.
2. WELDS ARE ALL AROUND WITH TYPE ER70S–6 WIRE MIG.
3. ALL STEEL TO BE HOT DIPPED GALVANIZED TO A.S.T.M. A–123–89 ae1.
4. STRUCTURAL BOLTS ARE HOT DIPPED GALV. AND ARE EQUAL TO OR GREATER THAN A–307.
5. NO CONNECTIONS UTILIZING HIGH STRENGTH BOLTS ARE CLASSED AS SLIP CRITICAL.
6. ANODIZED ALUMINUM RAIL IS 1 1/4" NOMINAL PIPE SIZE. (1 5/8" O.D.)
7. SOUTHERN BLEACHER COMPANY AS A MANUFACTURER AND INSTALLER OF GRANDSTAND SEATING IS NOT AUTHORIZED TO CERTIFY PLANS AS ADA COMPLIANT. HOWEVER, TO THE BEST OF OUR KNOWLEDGE THESE PLANS MEET OR EXCEED ADA REQUIREMENTS FOR QUANTITY OF ADA SEATING, ACCESS/EGRESS TO ADA SEATING, & DISPERSAL OF ADA SEATING.
8. AS SPECIFIED AND ILLUSTRATED, ALL ALUMINUM FOOTBOARDS AND WALKING SURFACES ARE MILL FINISH. MILL FINISH ALUMINUM, WHEN EXPOSED TO THE ATMOSPHERE, FORMS A TRANSPARENT, PROTECTIVE OXIDE COATING. MILL FINISH ALUMINUM WILL STAIN WHEN MOISTURE IS TRAPPED AGAINST IT. THIS MOISTURE ENTRAPMENT CAN OCCUR AT SEVERAL STAGES OF MATERIAL DELIVERY, INCLUDING PACKAGING, SHIPPING AND STORAGE. THESE STAINS CAN BE ERRATIC AND VARY IN COLOR FROM LIGHT BRONZE TO BLACK TO CHALKY WHITE. MOISTURE STAINS HAVE NO EFFECT ON THE STRENGTH OF THE MATERIAL. THESE STAINS BECOME LESS NOTICEABLE DURING NORMAL USAGE AND EXPOSURE TO THE SUN'S RADIATION.

THE ELEVATION OF 100'-0" IS USED AS A BASE ELEVATION. THIS IS FOR REFERENCE ONLY AND NOT TO BE USED AS THE ACTUAL ELEVATION.

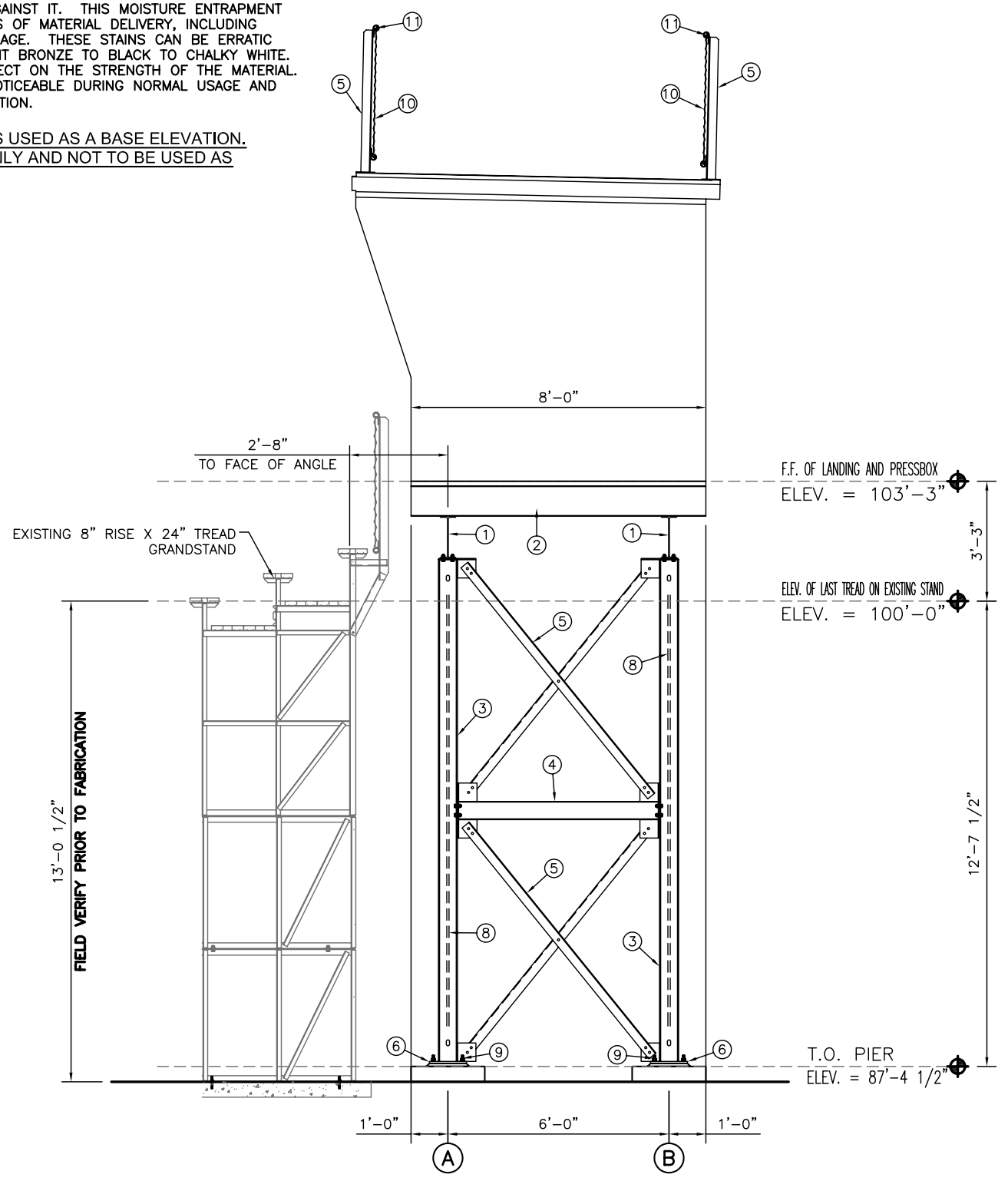

1/5/2 SECTION VIEW
SCALE:1/2"=1'–0"

DETAIL NUMBER 1/3/10 SHEET SHOWN ON SHEET CUT FROM

THIS DRAWING AND ALL INFORMATION THEREIN IS THE PROPERTY OF SAILER GROUP AND SOUTHERN BLEACHER COMPANY. IT MAY NOT BE COPIED OR REPRODUCED WITHOUT PRIOR WRITTEN CONSENT OF SAILER GROUP AND SOUTHERN BLEACHER COMPANY. THE DRAWING IS LOANED AND SUBJECT TO RETURN UPON DEMAND. DRAWING IS PROTECTED UNDER U.S. AND INTERNATIONAL COPYRIGHT LAW.

SAILER GROUP
STRUCTURAL ENGINEERS
LICENSED IN 45 STATES
3030 LBJ FREEWAY, SUITE 1080 • DALLAS, TEXAS 75234
Ph: (817) 332-1074
Fax: (817) 336-0745
Toll: (800) 900-7373
Email: tsailer@swbell.net

Southern BLEACHER COMPANY
GRANDSTANDS • BLEACHERS • STADIUMS
PO Box One, Graham, Texas 76450
801 Fifth Street.
Phone: 940/549-1365 Fax: 940/549-0733
Established 1946

TYPE: SECTION VIEW

TITLE: GARRETT COUNTY PUBLIC SCHOOLS
SOUTHERN GARRETT HIGH SCHOOL – PRESSBOX
OAKLAND, MARYLAND

REV BY	DATE	DESCRIPTION

DATE 5/10/10 | DRAWN DDW | CHECKED

JOB NUMBER 10121

SHEET 2 OF 7

22" X 34" (11x17 = 1/2 indicated scale)

ITEM DESCRIPTION

1. W 14 X 22 (50 ksi)
2. W 10 X 12 (50 ksi)
3. W 6 X 20 (50 ksi)
4. W 6 X 9 (50 ksi)
5. L 3 X 3 X 1/4 (50 ksi)
6. 12 X 12 X 5/8 PLATE
7. 6 X 8 X 3/8 PLATE
8. 3/4 X REQ'D LENGTH SWAY ROD (50 ksi)
9. 3/4 X 18 ANCHOR BOLT W/2 HEX HEAD NUTS & FLAT WASHER
10. 9 GAUGE CHAINLINK FENCE
11. ANODIZED ALUMINUM RAIL (SEE NOTES)

DESIGN LOADING

CODE OF REFERENCE – IBC 2006
OCCUPANCY GROUP – A5
CONSTRUCTION TYPE – VB
TREAD & SEAT AREA 100psf UNIFORM LIVE LOAD.
SEAT (VERTICAL) 120 lbs/lf.
SEAT (HORIZONTAL SWAY) 24lbs/lf PARALLEL AND 10lbs/lf PERPENDICULAR TO SEAT.
HANDRAIL & GUARDRAIL 50 lbs/lf IN ANY DIRECTION.
HANDRAIL & GUARDRAIL 200 lbs CONCENTRATED IN ANY DIRECTION.
SNOW LOADS AS PER STATE ADOPTED CODE
WIND LOADS AS PER STATE ADOPTED CODE
SEISMIC LOADS AS PER STATE ADOPTED CODE
STAIR TREADS & AISLE TREADS RESIST MINIMUM CONCENTRATED LOAD OF 300 POUNDS ON AN AREA OF 4 SQUARE INCHES

NOTES

1. STRUCTURAL SHAPES MEET ONE OF THE FOLLOWING ASTM SPECIFICATIONS: A36, A36/A572 GRADE 50, A572 GRADE 50, A529–50, OR A500 GRADE B.
2. WELDS ARE ALL AROUND WITH TYPE ER70S–6 WIRE MIG.
3. ALL STEEL TO BE HOT DIPPED GALVANIZED TO A.S.T.M. A–123–89 ae1.
4. STRUCTURAL BOLTS ARE HOT DIPPED GALV. AND ARE EQUAL TO OR GREATER THAN A–307.
5. NO CONNECTIONS UTILIZING HIGH STRENGTH BOLTS ARE CLASSED AS SLIP CRITICAL.
6. ANODIZED ALUMINUM RAIL IS 1 1/4" NOMINAL PIPE SIZE. (1 5/8" O.D.)
7. SOUTHERN BLEACHER COMPANY AS A MANUFACTURER AND INSTALLER OF GRANDSTAND SEATING IS NOT AUTHORIZED TO CERTIFY PLANS AS ADA COMPLIANT. HOWEVER, TO THE BEST OF OUR KNOWLEDGE THESE PLANS MEET OR EXCEED ADA REQUIREMENTS FOR QUANTITY OF ADA SEATING, ACCESS/EGRESS TO ADA SEATING, & DISPERSAL OF ADA SEATING.
8. AS SPECIFIED AND ILLUSTRATED, ALL ALUMINUM FOOTBOARDS AND WALKING SURFACES ARE MILL FINISH. MILL FINISH ALUMINUM, WHEN EXPOSED TO THE ATMOSPHERE, FORMS A TRANSPARENT, PROTECTIVE OXIDE COATING. MILL FINISH ALUMINUM WILL STAIN WHEN MOISTURE IS TRAPPED AGAINST IT. THIS MOISTURE ENTRAPMENT CAN OCCUR AT SEVERAL STAGES OF MATERIAL DELIVERY, INCLUDING PACKAGING, SHIPPING AND STORAGE. THESE STAINS CAN BE ERRATIC AND VARY IN COLOR FROM LIGHT BRONZE TO BLACK TO CHALKY WHITE. MOISTURE STAINS HAVE NO EFFECT ON THE STRENGTH OF THE MATERIAL. THESE STAINS BECOME LESS NOTICEABLE DURING NORMAL USAGE AND EXPOSURE TO THE SUN'S RADIATION.

THE ELEVATION OF 100'-0" IS USED AS A BASE ELEVATION. THIS IS FOR REFERENCE ONLY AND NOT TO BE USED AS THE ACTUAL ELEVATION.

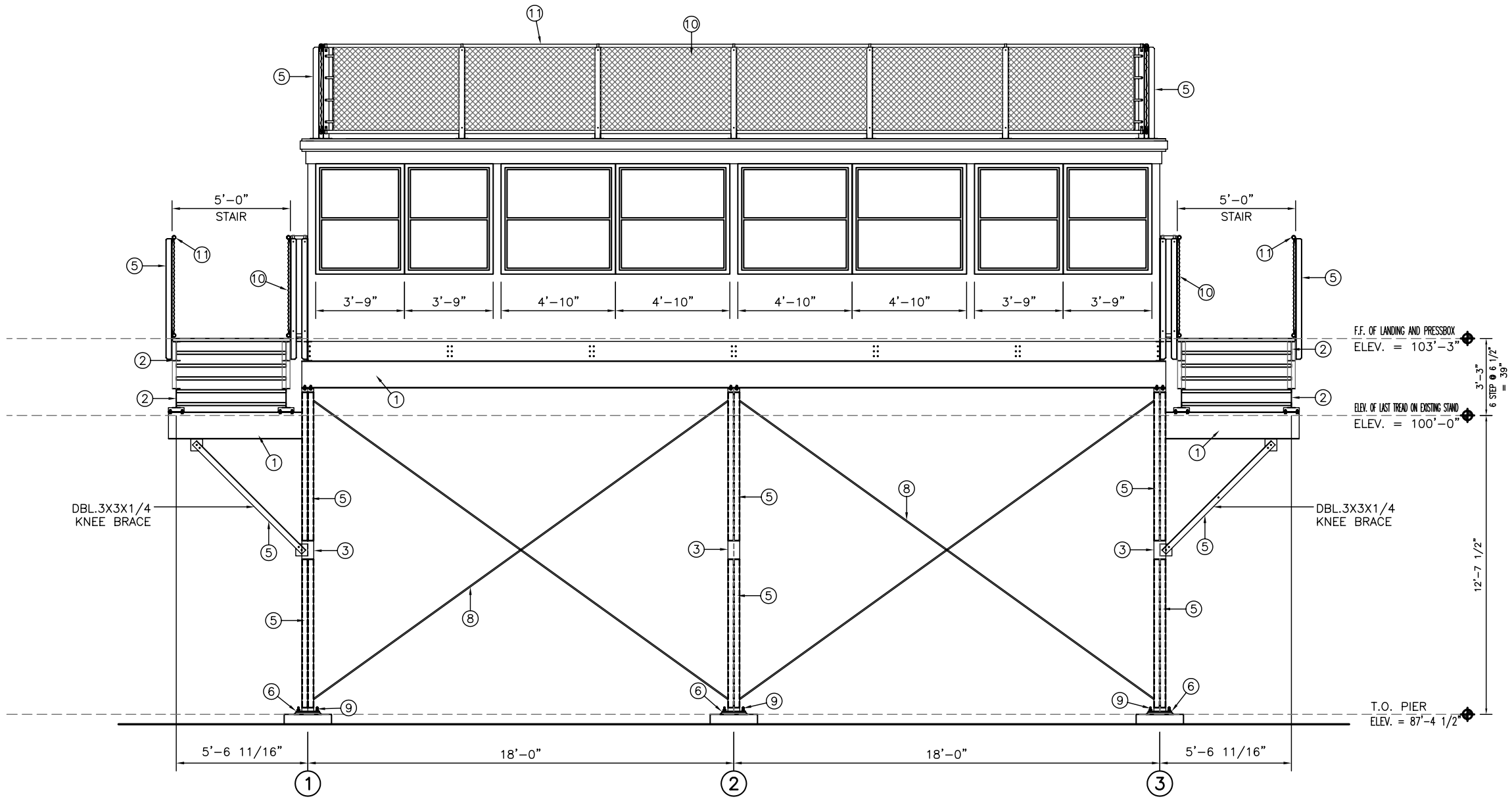

1/5/3 FRONT ELEVATION VIEW
SCALE:3/8"=1'–0"

DETAIL NUMBER 1 / 3 | SHEET 10 SHOWN ON SHEET 3 CUT FROM

THIS DRAWING AND ALL INFORMATION THEREIN IS THE PROPERTY OF SAILER GROUP AND SOUTHERN BLEACHER COMPANY. IT MAY NOT BE COPIED OR REPRODUCED WITHOUT PRIOR WRITTEN CONSENT OF BOTH SAILER GROUP AND SOUTHERN BLEACHER COMPANY. THE DRAWING IS LOANED AND SUBJECT TO RETURN UPON DEMAND. DRAWING IS PROTECTED UNDER U.S. AND INTERNATIONAL COPYRIGHT LAW.

ADLER GROUP
STRUCTURAL ENGINEERS
LICENSED IN 45 STATES
3030 LBJ FREEWAY, SUITE 1080 • DALLAS, TEXAS 75234
Ph: (817) 332-1074
Fax: (817) 336-0854
Toll: (800) 900-7373
Email: readler@swbell.net

Southern BLEACHER COMPANY
GRANDSTANDS • BLEACHERS • STADIUMS
PO Box One, Graham, Texas 76450
801 Fifth Street.
Phone: 940/549-0733 Fax: 940/549-1365
Established 1946

TYPE: FRONT ELEVATION VIEW

TITLE: GARRETT COUNTY PUBLIC SCHOOLS
SOUTHERN GARRETT HIGH SCHOOL – PRESSBOX
OAKLAND, MARYLAND

REV	BY	DATE	DESCRIPTION

DATE 5/10/10 | DRAWN DDW | CHECKED

JOB NUMBER 10121

SHEET 3 OF 7

22" X 34" (11x17 = 1/2 indicated scale)

ITEM DESCRIPTION

1. W 14 X 22 (50 ksi)
2. W 10 X 12 (50 ksi)
3. W 6 X 20 (50 ksi)
4. W 6 X 9 (50 ksi)
5. L 3 X 3 X 1/4 (50 ksi)
6. 12 X 12 X 5/8 PLATE
7. 6 X 8 X 3/8 PLATE
8. 3/4 X REQ'D LENGTH SWAY ROD (50 ksi)
9. 3/4 X 18 ANCHOR BOLT W/2 HEX HEAD NUTS & FLAT WASHER
10. 9 GAUGE CHAINLINK FENCE
11. ANODIZED ALUMINUM RAIL (SEE NOTES)

DESIGN LOADING

CODE OF REFERENCE – IBC 2006
OCCUPANCY GROUP – A5
CONSTRUCTION TYPE – VB
TREAD & SEAT AREA 100psf UNIFORM LIVE LOAD.
SEAT (VERTICAL) 120 lbs/lf.
SEAT (HORIZONTAL SWAY) 24lbs/lf PARALLEL AND 10lbs/lf PERPENDICULAR TO SEAT.
HANDRAIL & GUARDRAIL 50 lbs/lf IN ANY DIRECTION.
HANDRAIL & GUARDRAIL 200 lbs CONCENTRATED IN ANY DIRECTION.
SNOW LOADS AS PER STATE ADOPTED CODE
WIND LOADS AS PER STATE ADOPTED CODE
SEISMIC LOADS AS PER STATE ADOPTED CODE
STAIR TREADS & AISLE TREADS RESIST MINIMUM CONCENTRATED LOAD OF 300 POUNDS ON AN AREA OF 4 SQUARE INCHES

NOTES

1. STRUCTURAL SHAPES MEET ONE OF THE FOLLOWING ASTM SPECIFICATIONS: A36, A36/A572 GRADE 50, A572 GRADE 50, A529–50, OR A500 GRADE B.
2. WELDS ARE ALL AROUND WITH TYPE ER70S–6 WIRE MIG.
3. ALL STEEL TO BE HOT DIPPED GALVANIZED TO A.S.T.M. A–123–89 ae1.
4. STRUCTURAL BOLTS ARE HOT DIPPED GALV. AND ARE EQUAL TO OR GREATER THAN A–307.
5. NO CONNECTIONS UTILIZING HIGH STRENGTH BOLTS ARE CLASSED AS SLIP CRITICAL.
6. ANODIZED ALUMINUM RAIL IS 1 1/4" NOMINAL PIPE SIZE. (1 5/8" O.D.)
7. SOUTHERN BLEACHER COMPANY AS A MANUFACTURER AND INSTALLER OF GRANDSTAND SEATING IS NOT AUTHORIZED TO CERTIFY PLANS AS ADA COMPLIANT. HOWEVER, TO THE BEST OF OUR KNOWLEDGE THESE PLANS MEET OR EXCEED ADA REQUIREMENTS FOR QUANTITY OF ADA SEATING, ACCESS/EGRESS TO ADA SEATING, & DISPERSAL OF ADA SEATING.
8. AS SPECIFIED AND ILLUSTRATED, ALL ALUMINUM FOOTBOARDS AND WALKING SURFACES ARE MILL FINISH. MILL FINISH ALUMINUM, WHEN EXPOSED TO THE ATMOSPHERE, FORMS A TRANSPARENT, PROTECTIVE OXIDE COATING. MILL FINISH ALUMINUM WILL STAIN WHEN MOISTURE IS TRAPPED AGAINST IT. THIS MOISTURE ENTRAPMENT CAN OCCUR AT SEVERAL STAGES OF MATERIAL DELIVERY, INCLUDING PACKAGING, SHIPPING AND STORAGE. THESE STAINS CAN BE ERRATIC AND VARY IN COLOR FROM LIGHT BRONZE TO BLACK TO CHALKY WHITE. MOISTURE STAINS HAVE NO EFFECT ON THE STRENGTH OF THE MATERIAL. THESE STAINS BECOME LESS NOTICEABLE DURING NORMAL USAGE AND EXPOSURE TO THE SUN'S RADIATION.

THE ELEVATION OF 100'-0" IS USED AS A BASE ELEVATION. THIS IS FOR REFERENCE ONLY AND NOT TO BE USED AS THE ACTUAL ELEVATION.

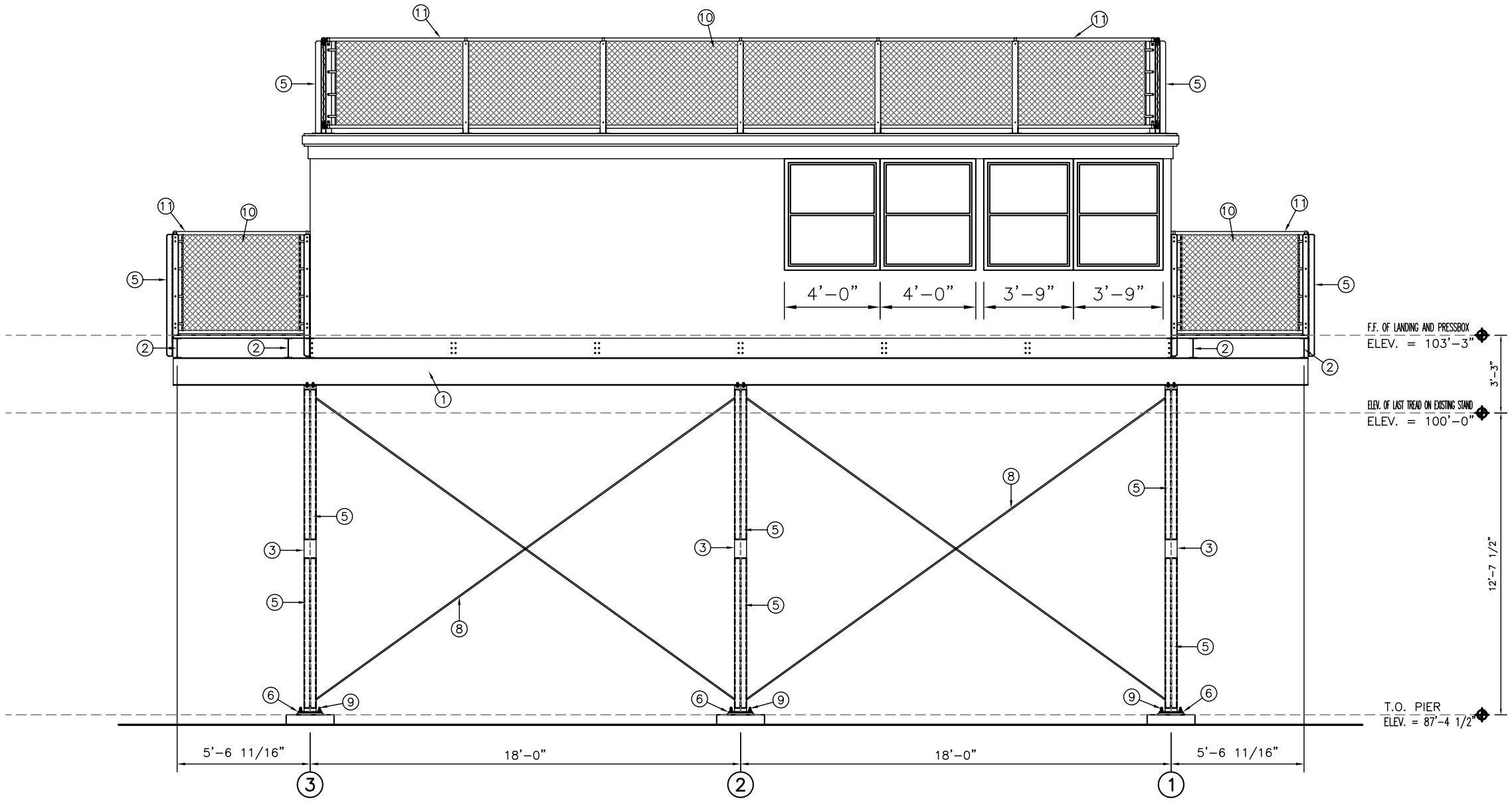

1 / 5|4 REAR ELEVATION VIEW
SCALE:3/8"=1'–0"

ADLER GROUP
STRUCTURAL ENGINEERS
LICENSED IN 45 STATES
3030 LBJ FREEWAY, SUITE 1080 • DALLAS, TEXAS 75234
Ph: (817) 332-1074
Fax: (817) 336-0854
Toll: (800) 900-7373
Email: readler@swbell.net

DETAIL NUMBER 1 / 3|10
SHEET SHOWN ON
SHEET CUT FROM

THIS DRAWING AND ALL INFORMATION THEREIN IS THE PROPERTY OF SAULER GROUP AND SOUTHERN BLEACHER COMPANY. IT MAY NOT BE COPIED OR REPRODUCED WITHOUT PRIOR WRITTEN CONSENT OF BOTH SAULER GROUP AND SOUTHERN BLEACHER COMPANY. THE DRAWING IS LOANED AND SUBJECT TO RETURN UPON DEMAND. DRAWING IS PROTECTED UNDER U.S. AND INTERNATIONAL COPYRIGHT LAW.

Southern BLEACHER COMPANY
GRANDSTANDS • BLEACHERS • STADIUMS
PO Box One, Graham, Texas 76450
801 Fifth Street.
Phone: 940/549-1365 Fax: 940/549-0733
Established 1946

TYPE: REAR ELEVATION VIEW

TITLE: GARRETT COUNTY PUBLIC SCHOOLS
SOUTHERN GARRETT HIGH SCHOOL – PRESSBOX
OAKLAND, MARYLAND

REV	BY	DATE	DESCRIPTION

DATE 5/10/10 | DRAWN DDW | CHECKED

JOB NUMBER 10121

SHEET 4 OF 7

22" X 34" (11x17 = 1/2 indicated scale)

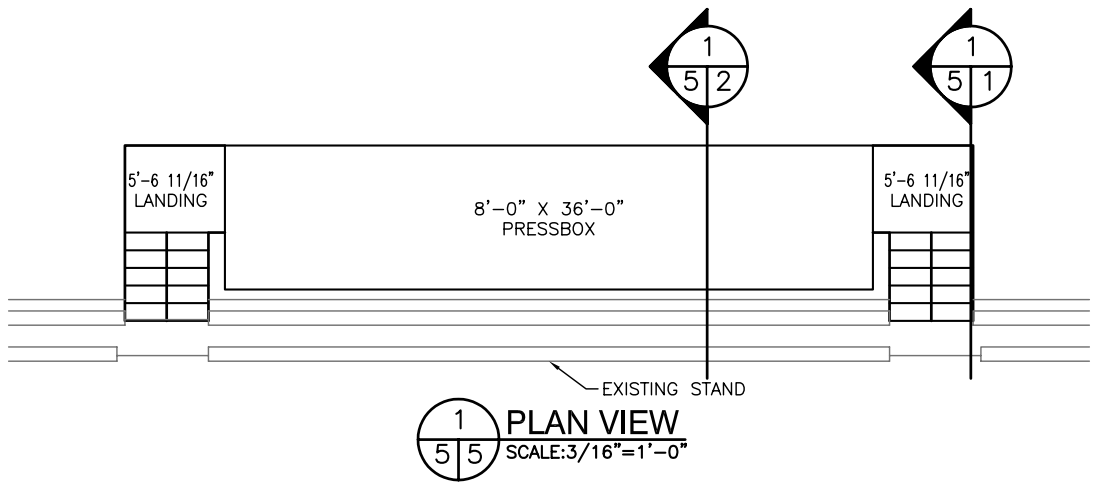

1/5 5 PLAN VIEW
SCALE:3/16"=1'-0"

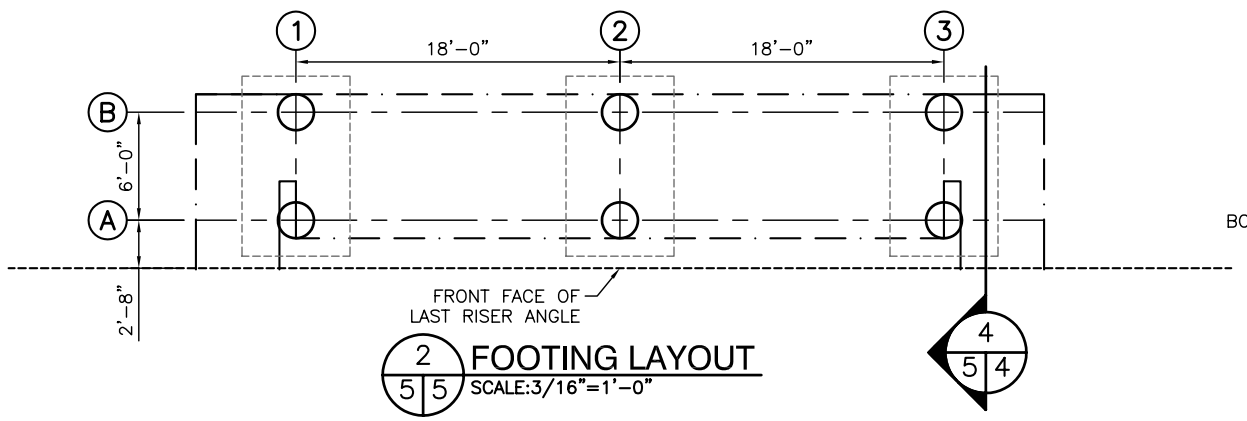

2/5 5 FOOTING LAYOUT
SCALE:3/16"=1'-0"

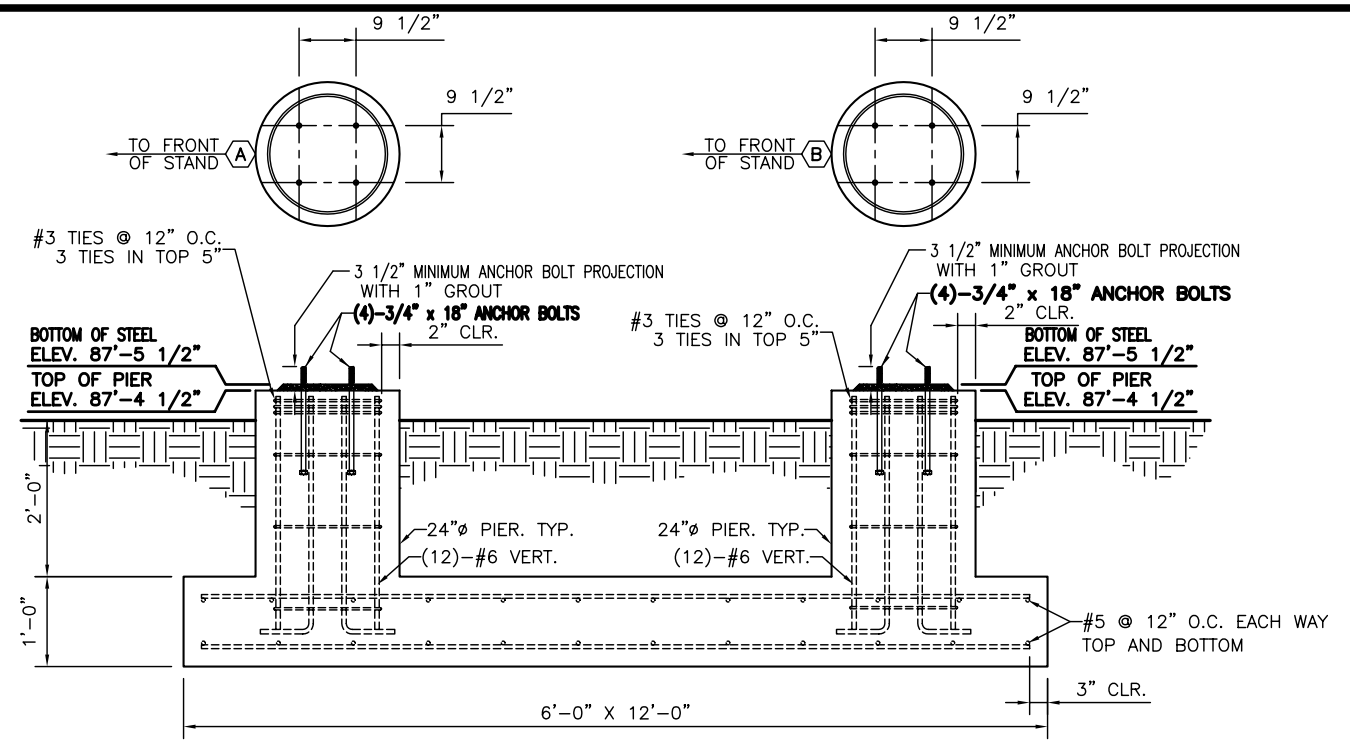

4/5 5 "A" & "B" ROW PIER DETAIL
NOT TO SCALE

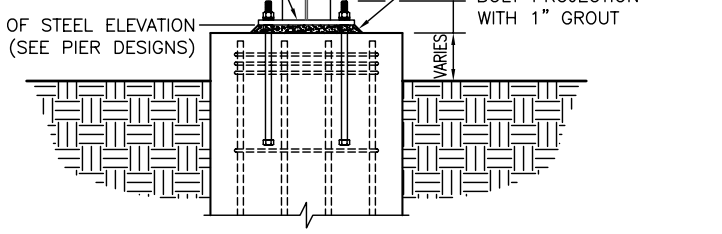

5/5 5 "A" & "B" ROW PIER TOP DETAIL
NOT TO SCALE

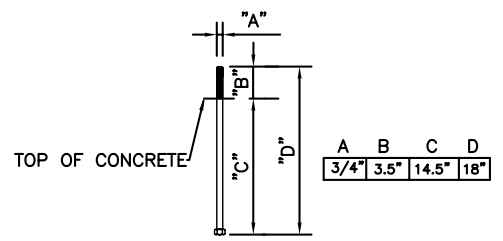

ALTERNATE ANCHOR BOLTS
A307 3/4"X21"X3" RIGHT ANGLE BEND BOLT IN PLACE OF 3/4"X18" HEADED BOLT

6/5 5 ANCHOR BOLT DETAIL
NOT TO SCALE

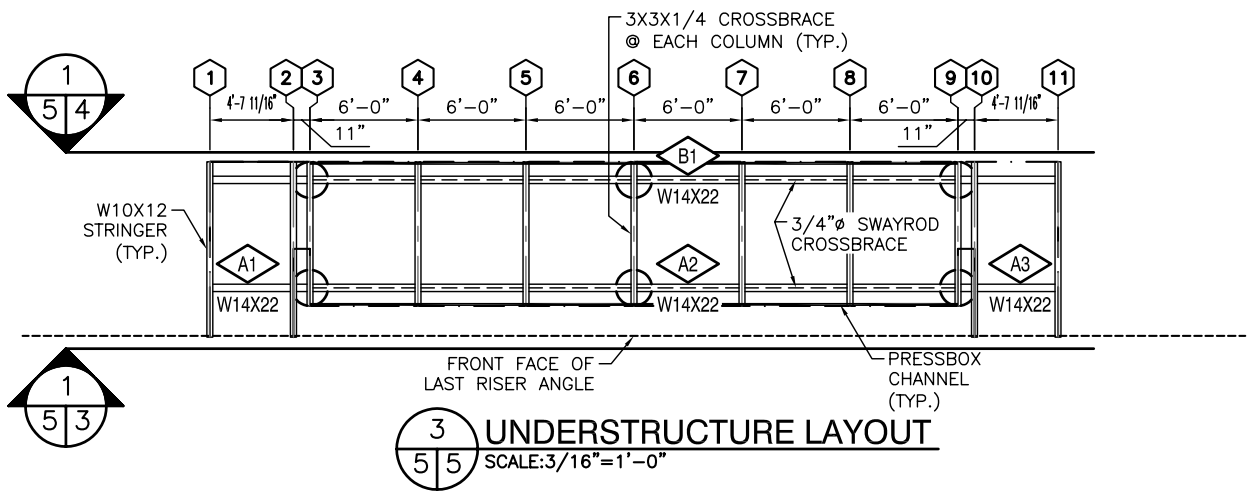

3/5 5 UNDERSTRUCTURE LAYOUT
SCALE:3/16"=1'-0"

FOUNDATION NOTES

1. CONTRACTOR SHALL VERIFY ALL DIMENSIONS PRIOR TO START OF CONSTRUCTION.
2. REINFORCING STEEL SHALL BE ASTM GRADE 60
3. CONCRETE SHALL HAVE A MINIMUM COMPRESSIVE STRENGTH OF 3000 PSI. AT 28 DAYS
4. ALLOWABLE SOIL BEARING CAPACITY = **2,000 PSF (ASSUMED)**
5. MAXIMUM HORZ. TOLERANCE OF ANCHOR BOLT PLACEMENT SHALL BE ±1/8"
6. ALL ANCHOR BOLTS SHALL HAVE A 3 1/2" PROJECTION (± 1/8") ABOVE THE TOP OF PIER ELEVATION, UNLESS SPECIFICALLY NOTED OTHERWISE.
7. THE CONCRETE FOUNDATION CONTRACTOR IS RESPONSIBLE FOR NON SHRINK GROUTING.
8. THE ELEVATION AT THE TOP OF THE CONCRETE PIER IS DESIGNED TO BE 1" BELOW THE BOTTOM OF STEEL ELEVATION. THE TOLERANCE FOR THE BOTTOM OF STEEL ELEVATION IS ±1/8" THE TOP OF CONCRETE ELEVATION MAY BE RAISED TO MATCH THE BOTTOM OF STEEL ELEVATION, AT THE CONCRETE CONTRACTORS DISCRETION. THE CONTRACTOR OF THE CONCRETE FOUNDATIONS IS RESPONSIBLE FOR ANY ADJUSTMENTS REQUIRED.
9. **ALL UNDERGROUND UTILITIES ARE TO BE LOCATED AND MARKED DURING THE REVIEW PROCESS BY THE OWNERS REPRESENTATIVE PRIOR TO FOUNDATION EXCAVATION.**
10. A307 3/4"X21"X3" RIGHT ANGLE BEND BOLT MAY BE USED IN PLACE OF 3/4"X18" HEADED BOLT

1/10 3 DETAIL NUMBER
SHEET SHOWN ON
SHEET CUT FROM

THIS DRAWING AND ALL INFORMATION THEREIN IS THE PROPERTY OF SAILER GROUP AND SOUTHERN BLEACHER COMPANY. IT MAY NOT BE COPIED OR REPRODUCED WITHOUT PRIOR WRITTEN CONSENT OF SAILER GROUP AND SOUTHERN BLEACHER COMPANY. THE DRAWING IS LOANED AND SUBJECT TO RETURN UPON DEMAND. DRAWING IS PROTECTED UNDER U.S. AND INTERNATIONAL COPYRIGHT LAW.

ADLER GROUP
STRUCTURAL ENGINEERS
LICENSED IN 45 STATES
300 MAIN STREET, SUITE 1000 • FORT WORTH, TEXAS 76102
Ph: (817) 335-1074
Fax: (817) 336-1935
Toll: (800) 900-7373
Email: feather@swbell.net

PO Box One, Graham, Texas 76450
801 Fifth Street.
Phone: 940/549-1365 Fax: 940/549-0733
Southern BLEACHER COMPANY
GRANDSTANDS • BLEACHERS • STADIUMS
Established 1946

TYPE: PLAN VIEW

TITLE: GARRETT COUNTY PUBLIC SCHOOLS
SOUTHERN GARRETT HIGH SCHOOL - PRESSBOX
OAKLAND, MARYLAND

REV BY	DATE	DESCRIPTION

DATE: 5/10/10
DRAWN: DDW
CHECKED:

JOB NUMBER: 10121

SHEET: 5 OF: 7

22" X 34" (11x17 = 1/2 indicated scale)

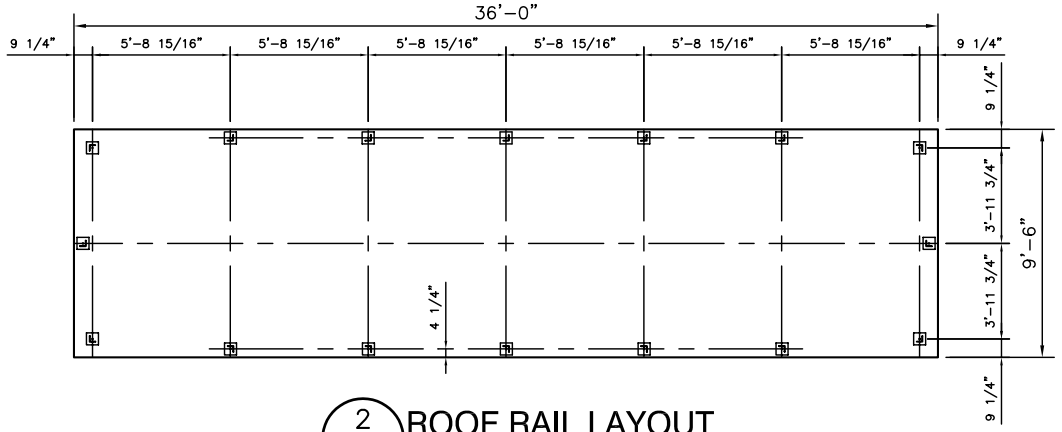

2 / 6 6 ROOF RAIL LAYOUT
SCALE:1/4"=1'-0"

FOR FRONT AND REAR ELEVATION VIEWS REFER TO SHEETS #3 & #4

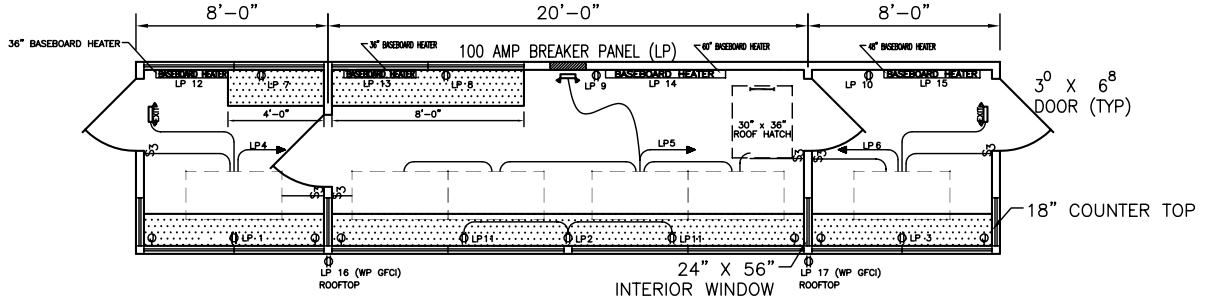

1 / 6 6 PLAN VIEW
SCALE:1/4"=1'-0"

PANELBOARD SCHEDULE

GENERAL ELECTRIC #TLM1620CCU

PANEL LP 200 AMP – 32 CIRCUIT W/ EQUIPMENT GROUND 240/120 VOLTS 1 PH.

MOUNTING: ☒FLUSH ☐SURFACE 10,000 SYN. A.I.C. MIN. 100 AMP MAIN BREAKER

	BREAKER SIZE	POLE	CIR. #	BUS A	BUS B	CIR. #	BREAKER SIZE	POLE	
RECPT. FRONT WALL	20	1	1	●		2	20	1	RECPT. FRONT WALL
RECPT. FRONT WALL	20	1	3	●		4	20	1	(1) 4'X2' 2 LAMP RECESSED
(4) 4'X2' 2 LAMP RECESSED	20	1	5		●	6	20	1	(1) 4'X2' 2 LAMP RECESSED
RECPT. BACK WALL	20	1	7		●	8	20	1	RECPT. BACK WALL
RECPT. BACK WALL	20	1	9	●		10	20	1	RECPT. BACK WALL
2 RECPTACLES FRONT WALL	20	1	11	●		12	20	1	36" BASE BOARD HEATER
36" BASE BOARD HEATER	20	1	13		●	14	20	1	60" BASE BOARD HEATER
48" BASE BOARD HEATER	20	1	15		●	16	20	1	RECPT. ROOFTOP
RECPT. ROOFTOP	20	1	17	●		18	20	1	SPARE
SPARE	20	1	19	●		20			SPACE
SPACE			21		●	22			SPACE
SPACE			23		●	24			SPACE
SPACE			25	●		26			SPACE
SPACE			27	●		28			SPACE
SPACE			29		●	30			SPACE
SPACE			31		●	32			SPACE

15A. 125V. DUPLEX RECPT.
S_3 15A. 125V. 3 WAY SWITCH
S 15A. 125V. SINGLE POLE SWITCH
4X4X2 1/8" JUNCTION BOX

LITHONIA LIGHTING
2GT8 232 A12 MVOLT GEB
OR EQUAL

CONDUIT WILL BE 1/2" EMT, 1/2" STEELFLEX, OR SUFACE RACEWAY UNLESS OTHERWISE NOTED

WIRING ON 20A BREAKERS WILL BE #12 = CV – THWN – THHN

EQUIPMENT GROUND RUN IN ALL CONDUITS OR NON-METALLIC SURFACE RACEWAYS

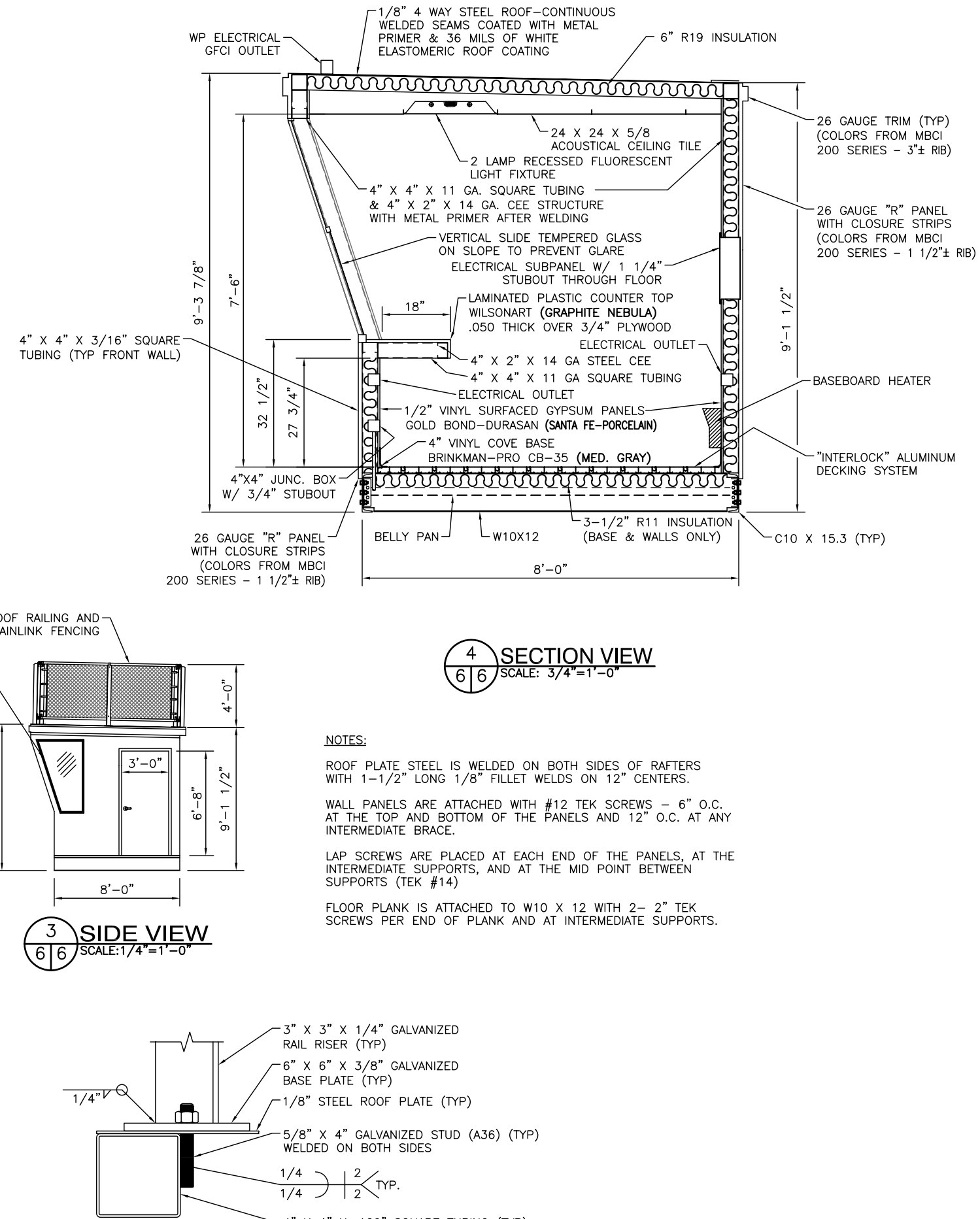

4 / 6 6 SECTION VIEW
SCALE: 3/4"=1'-0"

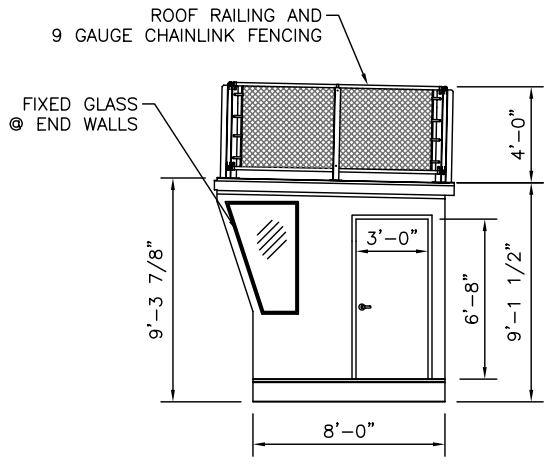

3 / 6 6 SIDE VIEW
SCALE:1/4"=1'-0"

NOTES:

ROOF PLATE STEEL IS WELDED ON BOTH SIDES OF RAFTERS WITH 1–1/2" LONG 1/8" FILLET WELDS ON 12" CENTERS.

WALL PANELS ARE ATTACHED WITH #12 TEK SCREWS – 6" O.C. AT THE TOP AND BOTTOM OF THE PANELS AND 12" O.C. AT ANY INTERMEDIATE BRACE.

LAP SCREWS ARE PLACED AT EACH END OF THE PANELS, AT THE INTERMEDIATE SUPPORTS, AND AT THE MID POINT BETWEEN SUPPORTS (TEK #14)

FLOOR PLANK IS ATTACHED TO W10 X 12 WITH 2– 2" TEK SCREWS PER END OF PLANK AND AT INTERMEDIATE SUPPORTS.

5 / 6 6 ROOF RAIL ATTACHMENT
NOT TO SCALE

ADLER GROUP
STRUCTURAL ENGINEERS
LICENSED IN 45 STATES
500 MAIN STREET, SUITE 1000 • FORT WORTH, TEXAS 76102
Ph: (817) 332-1074
Fax: (817) 336-0854
Toll: (800) 990-7373
Email: readler@swbell.net

Southern BLEACHER COMPANY
GRANDSTANDS • BLEACHERS • STADIUMS
PO Box One, Graham, Texas 76450
801 Fifth Street.
Phone: 940/549-1365 Fax: 940/549-0733
Established 1946

THIS DRAWING AND ALL INFORMATION THEREIN IS THE PROPERTY OF SADLER GROUP AND SOUTHERN BLEACHER COMPANY. IT MAY NOT BE COPIED OR REPRODUCED WITHOUT PRIOR WRITTEN CONSENT OF BOTH SADLER GROUP AND SOUTHERN BLEACHER COMPANY. THE DRAWING IS LOANED AND SUBJECT TO RETURN UPON DEMAND. DRAWING IS PROTECTED UNDER U.S. AND INTERNATIONAL COPYRIGHT LAW.

1 / 3 10 DETAIL NUMBER / SHEET SHOWN ON / SHEET CUT FROM

TYPE: PRESSBOX SHEET

TITLE: GARRETT COUNTY PUBLIC SCHOOLS
SOUTHERN GARRETT HIGH SCHOOL – PRESSBOX
OAKLAND, MARYLAND

REV	BY	DATE	DESCRIPTION

DATE 5/10/10 DRAWN DDW CHECKED

JOB NUMBER 10121

SHEET 6 OF 7

22" X 34" (11x17 = 1/2 indicated scale)

22" X 34" (11x17 = 1/2 indicated scale)

SHEET	OF
7	7

JOB NUMBER **10121**

REV	BY	DATE	DESCRIPTION

DRAWN DSW

CHECKED

DATE **5/10/10**

TITLE

DETAIL SHEET

PROJECT

GARRETT COUNTY PUBLIC SCHOOLS
SOUTHERN GARRETT HIGH SCHOOL - PRESSBOX
OAKLAND, MARYLAND

ADLER GROUP
STRUCTURAL ENGINEERS
LICENSED IN 45 STATES
SUSANNA STREET, SUITE 704 • FORT WORTH, TEXAS 76102

Ph: (817) 332-1074
Fax: (817) 332-5515
Toll: (800) 906-7323
Email: tsadler@swbell.net

Southern
GRANDSTANDS • BLEACHERS • STADIUMS
BLEACHER COMPANY
Established 1946

PO Box One, Graham, Texas 76450
801 Fifth Street.
Phone: 940/549-0733 Fax: 940/549-1365

1 7/10 DETAIL NUMBER
SHEET SHOWN ON
SHEET CUT FROM

THE DRAWING AND ALL INFORMATION THEREIN IS THE PROPERTY OF SADLER GROUP AND SOUTHERN BLEACHER COMPANY. IT MAY NOT BE USED OR REPRODUCED IN ANY MANNER WITHOUT CONSENT OF BOTH SADLER GROUP AND SOUTHERN BLEACHER COMPANY. THE DRAWING IS LOANED AND SUBJECT TO RETURN UPON DEMAND.
ALL RIGHTS RESERVED UNDER U.S. AND INTERNATIONAL COPYRIGHT LAW.

---

1 — STRINGER SNOOTER JOINT CONNECTION (7/7 NOT TO SCALE)

2 — TYPICAL BEAM TO COLUMN DETAIL (7/7 NOT TO SCALE)

3 — PLANK INSTALLATION DETAIL (7/7 NOT TO SCALE)

4 — SIDE RAIL RISER ATTACHMENT DETAIL (7/7 NOT TO SCALE)

5 — TENSION BAR CLAMP DETAIL (7/7 NOT TO SCALE)

6 — RAIL RISER ATTACHMENT DETAIL (7/7 NOT TO SCALE)

7 — END CAP INSTALLATION DETAIL (7/7 NOT TO SCALE)

1. LOCATE THE END CAP AS SHOWN. (WITH WIDEST FLANGE ON BOTTOM FOR CHANNEL E.C., AND NARROW FLANGE ON TOP FOR ANGLE E.C.)
2. MECHANICALLY FASTEN THROUGH BOTTOM FLANGE OF CHANNEL E.C. AND TOP FLANGE OF ANGLE E.C. (CHANNEL E.C. SHOULD BE TAPPED INTO PLACE WITH A RUBBER MALLET AS NECESSARY.)

8 — BASE PLATE ATTACHMENT DETAIL (7/7 NOT TO SCALE)

9 — ANGLE FAB DETAIL (7/7 NOT TO SCALE)